7 CHARGING AND DISCHARGING OF A CAPACITOR

Experiment

Object

To study the charging and discharging of a capacitor and hence to determine time constant. Both current and voltage graph are to be plotted.

Apparatus

Circuit Board, D.C. Power supply, Resistance of various values R1, R2, R3, Condensers of different capacities (C1, C2, C3), Milliammeter, Voltmeter keys, battery, stopwatch etc.

Theory and Formula

During the charging of capacitor, charge on plates of capacitor and potential difference increases between its plates and current decreases exponentially as:

$$q = q_0 \ (1 - e^{-t/RC})$$

$$I = I_0 \ e^{-t/RC}$$

$$V = E(1 - e^{-t/RC})$$

and, during discharging of capacitor, charge on plates of capacitor, potential difference and current decreases exponentially as:

$$q = q_0 \, e^{-t/RC}$$

$$I = -I_0 \, e^{-t/RC}$$

$$V = E \, e^{-t/RC}$$

where time constant of circuit $\tau = RC$

And it is given by, the time, at which during charging, the charge and potential difference increases upto 63% of their maximum value and current decreases to 37% of maximum value.

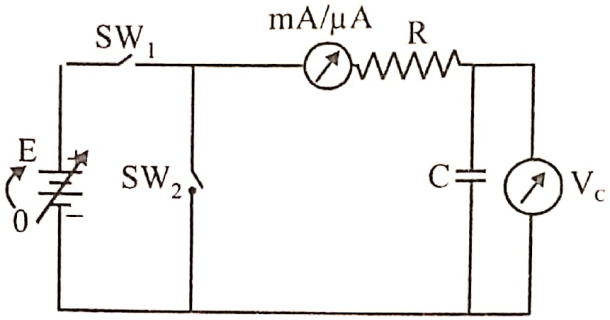

Fig. 7.1 Typical circuit for studying the charging and discharging of a capacitor.

Procedure

Charging and Discharging:

1. Connect the electronic circuit board (or a Bread board with necessary components) to A.C. Supply and switch it on. Connect voltmeter across the power supply. Adjust the voltage of D.C. supply to full scale deflection in Voltmeter.
2. Make connection as shown in the figure. 5.1.
3. The value of resistance R and condensers C are so selected that the [time constant RC = 100 sec].
4. Current in the circuit gets started by pressing key SW_1 and simultaneously stop watch is started.
5. The reading of the voltmeter and miliammeter is noted every 20 seconds till it becomes constant.
6. A graph is plotted by taking potential difference V on Y-axis and time t on X-Axis, similarly another graph is plotted between I and t.
7. Calculate the value of time constant theoretically by using relation $\tau = RC$ and from I-t graph, as the time at which $I = 0.37\ I_0$.This comes out to be equal to time constant of the circuit.
8. The capacitor can be discharged by releasing SW_1 and pressing key SW_2.
9. Again stop watch is started and the reading of milliammeter and voltmeter are noted after every 20 seconds.
10. Graphs are plotted between V–t and I–t for discharging process also.
11. The above procedure is repeated for various values of R and C.

Observation Table

(a) *Charging of capacitor:*

S.No.	Time t (sec)	R = ... KΩ C = ... μF RC =. . . . sec		R = ... KΩ C = ... μF RC =. . . . sec	
		V (volt)	I(mA)	V(Volt)	I(mA)
1.	10				
2.	20				
3.	30				
4.	40				

(b) *Discharging of capacitor:*

S.No.	Time t (sec)	R = ...KΩ C = ...μF RC = ...sec		R = ...KΩ C = ...μF RC = ...sec	
		V(volt)	I(mA)	V(Volt)	I(mA)
1.	10				
2.	20				
3.	30				
4.	40				

Calculations

For R_1 = ... KΩ, C_1 = ... μF

Theoretical value of time constant $\tau_{1t} = R_1C_1$ = ... sec.

From V–t charging graph, the time corresponding to V = 0.63 V_0 i.e. time constant τ_1' = ...

From V–t discharging graph, the time corresponding to V = 0.37 V_0, i.e. time constant τ_1'' = ...

From I–t charging graph, the time corresponding to I = 0.37 I_0 i.e. time constant τ_1''' = ...

From I–t discharging graph, the time corresponding to I = 0.37 I_0 i.e. time constant τ_1'''' = ...

Mean value $$\tau_{1E} = \frac{\tau_1' + \tau_1'' + \tau_1''' + \tau_1''''}{4} = \ldots \text{sec.}$$

Repeat the same process for different set of R and C, and find theoretical and experimental value of time constant.

Result

The time constant of charging:

1. R_1 = . . . KΩ, C_1 = . . . μF

   Theoretical τ_{1t} = ... sec

   Experimental τ_{1E} = . . . sec

2. R_2 = . . . KΩ, C_2 = . . . μF

   Theoretical τ_{2t} = ... sec

   Experimental τ_{2E} = . . . sec

Precautions and sources of error

1. The value of resistance R and capacitor C must be so chosen that the time constant of circuit be large.
2. It is not possible to take voltmeter reading and ammeter reading simultaneously. Voltmeter and ammeter readings should be taken one after the other.
3. While decreasing the capacity, current decreases quickly. Therefore note current reading quickly and accurately.
4. The reading of stop watch should be very carefully taken.
5. As the stop watch is not synchronized with the apparatus we should be more careful in manual handling.

Practical Application

1. The discharge of capacitor through an inductor is oscillatory. When the capacitor is charged, the entire energy of the circuit is stored in the capacitor as electrostatic energy. The frequency of these oscillation is given by $\nu = \frac{1}{2\pi\sqrt{LC}}$. These electromagnetic waves or oscillation form the basis of wireless telegraph and also useful for signal transfer from one place to another place.
2. The information of time constant of a capacitor can help us design capacitor of different configurations like electrolytic capacitor etc.
3. It gives the value of capacitance of capacitor in different devices.
4. In particular capacitor due to their charge storage property are experimentally useful in power storage devices.